320W Quad Output with PFC Function

QP-320 series

■ Features :

- Universal AC input / Full range
- Built-in active PFC function, PF>0.95
- Protections: Short circuit / Overload / Over voltage / Over temperature
- CH1 & CH2 can be adjusted from -5% ~ +10%
- With power good and fail signal output
- Built-in remote sense function for CH1 & CH2
- LED indicator for power on
- 100% full load burn-in test
- 20A peak load capability for 24V channel
- 3 years warranty

SPECIFICATION

MODEL		QP-320D				QP-320F			
OUTPUT	OUTPUT NUMBER	CH1	CH2	CH3	CH4	CH1	CH2	CH3	CH4
	DC VOLTAGE	5V	12V	24V	-12V	5V	15V	24V	-15V
	RATED CURRENT	20A	10A	3A	2A	20A	8A	3A	1.6A
	CURRENT RANGE	2.5 ~ 20A	0 ~ 10A	0.2 ~ 5A	0.2 ~ 2A	2.5 ~ 20A	0 ~ 10A	0.2 ~ 5A	0.2 ~ 1.6A
	PEAK CURRENT	20A	10A	20A,≦1ms(Note5)	2A	20A	10A	20A,≦1ms(Note5)	1.6A
	RATED POWER	316W							
	RIPPLE & NOISE (max.) Note.2	100mVp-p	150mVp-p	150mVp-p	150mVp-p	100mVp-p	150mVp-p	150mVp-p	150mVp-p
	VOLTAGE ADJ. RANGE	CH1,2:+10,-5%							
	VOLTAGE TOLERANCE Note.3	±3.0%	±3.0%	+10,-6%	±10%	±3.0%	±3.0%	+10,-6%	±10%
	LINE REGULATION	±1.0%	±2.0%	±2.0%	±3.0%	±1.0%	±2.0%	±2.0%	±3.0%
	LOAD REGULATION	±2.0%	±3.0%	±6.0%	±8.0%	±2.0%	±3.0%	±6.0%	±8.0%
	SETUP, RISE TIME	800ms, 50ms at full load							
	HOLD UP TIME (Typ.)	16ms at full load							
INPUT	VOLTAGE RANGE	90 ~ 264VAC 127 ~ 370VDC							
	FREQUENCY RANGE	47 ~ 63Hz							
	POWER FACTOR (Typ.)	PF>0.95/230VAC PF>0.98/115VAC at full load							
	EFFICIENCY (Typ.)	83%							
	AC CURRENT (Typ.)	4A/115VAC 2A/230VAC							
	INRUSH CURRENT (Typ.)	25A/115VAC 45A/230VAC							
	LEAKAGE CURRENT	<2mA / 240VAC							
PROTECTION	OVERLOAD	105 ~ 150% rated output power							
		Protection type : Fold back current limiting, recovers automatically after fault condition is removed							
	OVER VOLTAGE	CH1:5.75 ~ 6.75V CH2:13.8 ~ 16.2V				CH1:5.75 ~ 6.75V CH2:17.25 ~ 20.25V			
		Protection type : Shut down o/p voltage, re-power on to recover							
	OVER TEMPERATURE	95℃±5℃ (TSW1)detect on heatsink of power transistor							
		Protection type : Shut down o/p voltage, recovers automatically after temperature goes down							
FUNCTION	POWER GOOD / POWER FAIL	10ms/1ms							
ENVIRONMENT	WORKING TEMP.	-10 ~ +70℃ (Refer to output load derating curve)							
	WORKING HUMIDITY	20 ~ 90% RH non-condensing							
	STORAGE TEMP., HUMIDITY	-20 ~ +85℃, 10 ~ 95% RH							
	TEMP. COEFFICIENT	±0.03%/℃ (0 ~ 50℃)							
	VIBRATION	10 ~ 500Hz, 2G 10min./1cycle, 60min. each along X, Y, Z axes							
SAFETY & EMC (Note 4)	SAFETY STANDARDS	UL60950-1, TUV EN60950-1 approved							
	WITHSTAND VOLTAGE	I/P-O/P:3KVAC I/P-FG:1.5KVAC O/P-FG:0.5KVAC							
	ISOLATION RESISTANCE	I/P-O/P, I/P-FG, O/P-FG:100M Ohms/500VDC							
	EMI CONDUCTION & RADIATION	Compliance to EN55022 (CISPR22) Class B							
	HARMONIC CURRENT	Compliance to EN61000-3-2,-3							
	EMS IMMUNITY	Compliance to EN61000-4-2,3,4,5,6,8,11; ENV50204, EN55024, light industry level, criteria A							
OTHERS	MTBF	213.5K hrs min. MIL-HDBK-217F (25℃)							
	DIMENSION	215*115*50mm (L*W*H)							
	PACKING	1.2Kg; 12pcs/15.4Kg/0.92CUFT							
NOTE	1. All parameters NOT specially mentioned are measured at 230VAC input, rated load and 25℃ of ambient temperature. 2. Ripple & noise are measured at 20MHz of bandwidth by using a 12" twisted pair-wire terminated with a 0.1uf & 47uf parallel capacitor. 3. Tolerance : includes set up tolerance, line regulation and load regulation. 4. Every output channel can provide up to the maximum current, but total load can't exceed the rated output power. 5. CH3(24V) peak current 20A,≦1ms, repeatable in every 100ms. CH3(24V) output must be above 16V in the period of peak current.								

■ Mechanical Specification

Case No. 912I Unit:mm

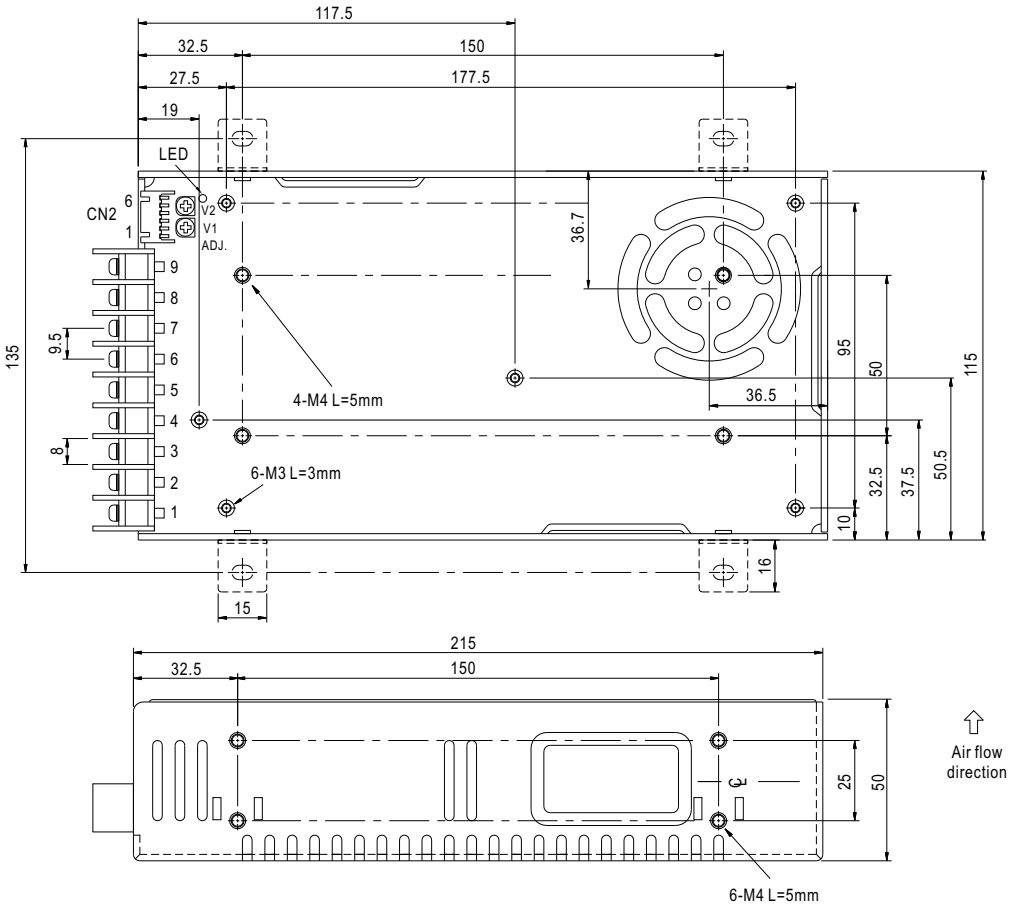

Terminal Pin No. assignment :

Pin No.	Assignment	Pin No.	Assignment	Pin No.	Assignment
1	AC/L	4	DC OUTPUT V4	7,8	DC OUTPUT COM
2	AC/N	5	DC OUTPUT V3	9	DC OUTPUT V2
3	FG	6	DC OUTPUT V1		

DC Output Connector (CN2) : JST S6B-XH-A-1 or equivalent

Pin No.	Assignment	Pin No.	Assignment	Mating Housing	Terminal
1	V1(+S)	4	V2(-S)	JST XHP or equivalent	JST SXH-001T-P0.6 or equivalent
2	V1(-S)	5	PF/PG		
3	V2(+S)	6	GND		

■ Derating Curve

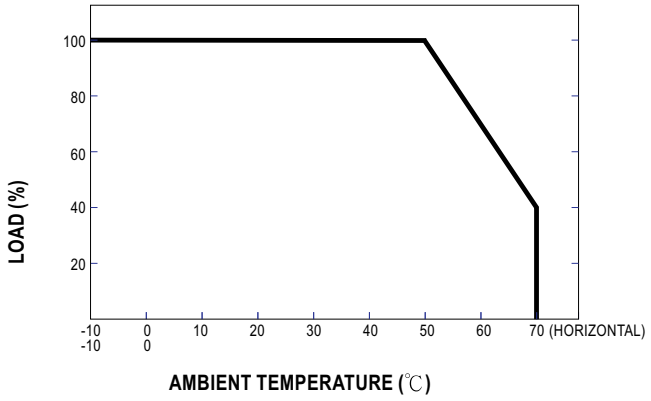

■ Output Derating VS Input Voltage